REVISIONS				
ZONE	REV	DESCRIPTION	DATE	APPROVED
	B	REDRAWN W/ 16" LID	23JAN02	

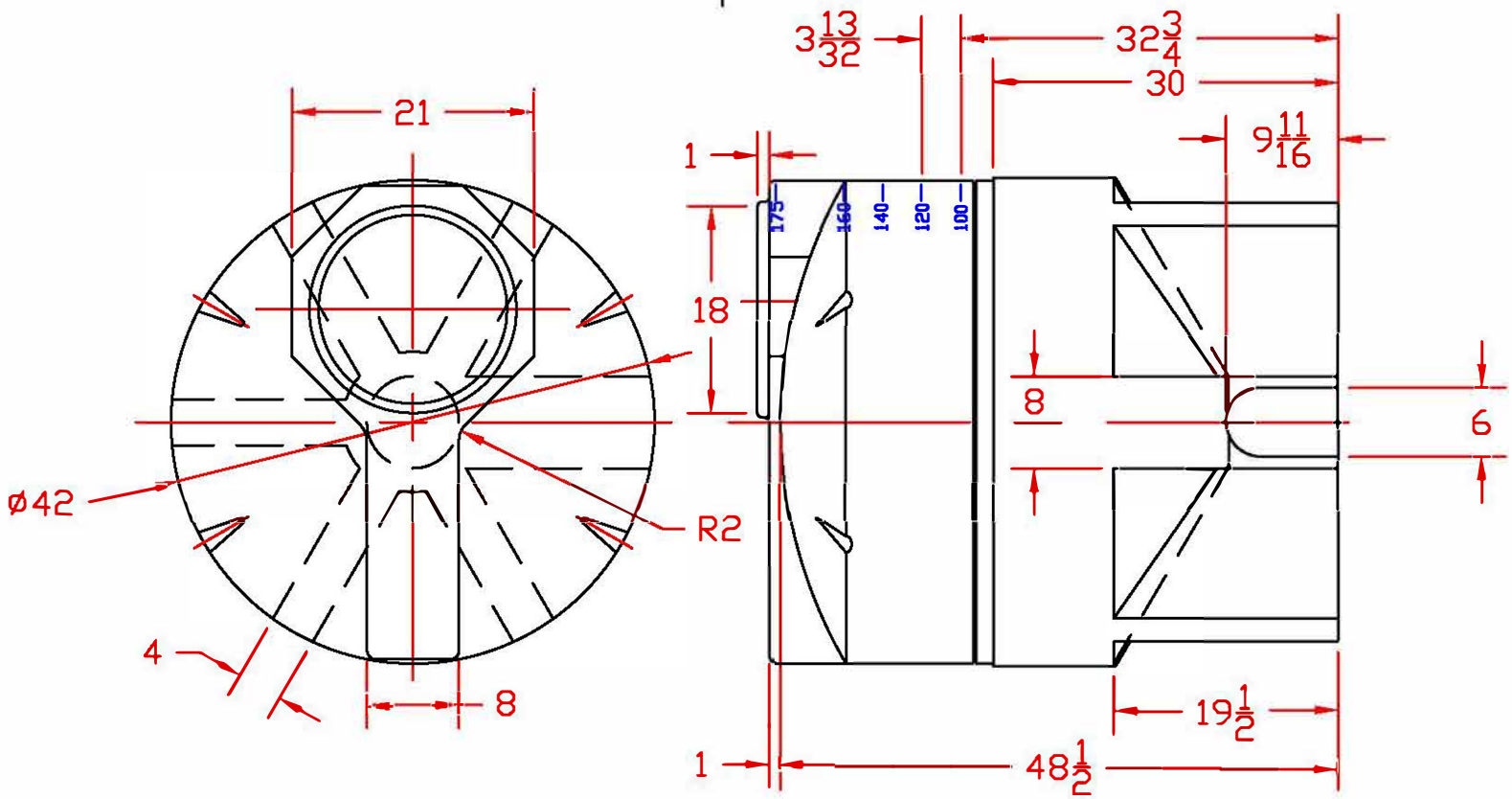

NORWESCO
ST. BONIFACIUS, MN

175 GALLON CONE BOTTOM TANK WITH STAND

JTP 23JAN02	SIZE A	FSCM NO.	DWG NO.	REV B
	SCALE 1/16		SHEET	